Work Order ID 72392

Monday, July 25, 2011 9:20:11 AM

Item ID: D412-702-305 **Accept** **Setup Start** **Stop**

Revision ID:

Item Name: Harness Assembly

Start Date: 7/25/2011 **Start Qty:** 1.00 **Cust Item ID:**

Required Date: 9/5/2011 **Req'd Qty:** 1.00 **Customer:**

Reference:

Run Start **Stop**

Approvals: **Process Plan:** CMF **Date:** 11-08-10 **Tooling:** _____ **Date:** _____

QC: _____ **Date:** _____ **SPC (Y/N):** _____ **Date:** _____

Sequence ID/ Work Center ID	Operation Description	Set Up/ Run Hours	Tool ID	Tool #	Plan Code	Accept Qty	Reject Qty	Reject Number	Insp. Stamp
Draw Nbr	**Revision Nbr**								
DSI 9511	A								
100		0.00							
Small Fab	**Memo**	0.00							
Small Fab	Assemble as per dwg ICA D412-702 p.49								
110	QC5- Inspect part completeness to step on W/O	0.00							
QC	**Memo**	0.00							
Quality Control									
120		0.00							
Packaging	**Memo**	0.00							
Packaging	Identify with P/N & CHG# and pack for shipping as per PPP D412-702-305 CHG001 Location: 267 CHANGE PLACE PPP Rev: 1								

Dart Aerospace Ltd

W/O:		WORK ORDER CHANGES					
DATE	STEP	PROCEDURE CHANGE	By	Date	Qty	Approval Chief Eng / Prod Mgr	Approval QC Inspector

Part No: _____ **PAR #:** _____ **Fault Category:** _____ **NCR:** Yes No **DQA:** _____ **Date:** _____

Resolution: _____ **Disposition:** _____ **QA: N/C Closed:** _____ **Date:** _____

NCR:		WORK ORDER NON-CONFORMANCE (NCR)						
DATE	STEP	Description of NC Section A	Corrective Action Section B			Verification Section C	Approval Chief Eng	Approval QC Inspector
			Initial Chief Eng	Action Description Chief Eng	Sign & Date			

NOTE: Date & initial all entries

H:\fFORMS\Quality Assurance\approved QA\NCRWO RevE

Work Order ID 72392

Monday, July 25, 2011 9:20:11 AM

Item ID: D412-702-305 **Accept** **Setup Start**

Revision ID: **Stop**

Item Name: Harness Assembly

Start Date: 7/25/2011 **Start Qty:** 1.00 **Cust Item ID:**

Required Date: 9/5/2011 **Req'd Qty:** 1.00 **Customer:**

Reference:

Run Start

Approvals: **Process Plan:** _____ **Date:** _____ **Tooling:** _____ **Date:** _____

Stop

QC: _____ **Date:** _____ **SPC (Y/N):** _____ **Date:** _____

Sequence ID/ Work Center ID	Operation Description	Set Up/ Run Hours	Tool ID	Tool #	Plan Code	Accept Qty	Reject Qty	Reject Number	Insp. Stamp
130	QC21- Final Inspection - Work Order Release	0.00							
QC Quality Control	**Memo**	0.00							

OK 11/08/10

11-08-10

(1)

Dart Aerospace Ltd

W/O:		WORK ORDER CHANGES					
DATE	STEP	PROCEDURE CHANGE	By	Date	Qty	Approval Chief Eng / Prod Mgr	Approval QC Inspector

Part No: _____ **PAR #:** _____ **Fault Category:** _____ **NCR:** Yes No **DQA:** _____ **Date:** _____

Resolution: _____ **Disposition:** _____ **QA: N/C Closed:** _____ **Date:** _____

NCR:		WORK ORDER NON-CONFORMANCE (NCR)						
DATE	STEP	Description of NC Section A	Corrective Action Section B			Verification Section C	Approval Chief Eng	Approval QC Inspector
			Initial Chief Eng	Action Description Chief Eng	Sign & Date			

NOTE: Date & initial all entries

H:\fFORMS\Quality Assurance\approved QA\NCRWO RevE

Picklist Print

Monday, July 25, 2011 9:20:16 AM

2

Work Order ID: 72392

Parent Item: D412-702-305

Parent Item Name: Harness Assembly

Start Date: 7/25/2011 **Required Date:** 9/5/2011

Start Qty: 1.00 **Required Qty:** 1.00

Comments: IPP Rev:A new issue DD 10.04.30 verified:EC

Component Item ID/ Item Name	Replacement Item ID	Mfg/ Purch	Bin Item	Primary Location	Last Location	Route Seq ID	Unit of Measure	Qty on Hand	Qty per Kit	Total Qty	Qty Issued	Date Issued	Status
D3573-1		Manufactured	No			100	Each	11.0000	1	1	EJ 11/08/10		
Adapter													
				Location			**Loc Qty**		**Loc Code**				
				GA			11						
					69463		11			1			
D4088-041		Manufactured	No			100	Each	8.0000	1	1	EJ 11/08/10		
Shoulder Harness													
				Location			**Loc Qty**		**Loc Code**				
				ST272A			8						
					68873		8			1			
MS24693-S273		Purchased	No			100	Each	834.0000	4	4	EJ 11/08/10		
Screw													
				Location			**Loc Qty**		**Loc Code**				
				ST288			834						
					100151		734			4			
					117291		100						
AN960JD10LL		Purchased	No			100	Each	3,757.000	4	4	EJ 11/08/10		
Washer													
				Location			**Loc Qty**		**Loc Code**				
				ST349			3757						
					19085		472			4			
					19600		3285						

Dart Aerospace Ltd

W/O:		WORK ORDER CHANGES					
DATE	STEP	PROCEDURE CHANGE	By	Date	Qty	Approval Chief Eng / Prod Mgr	Approval QC Inspector

Part No: _____ **PAR #:** _____ **Fault Category:** _____ **NCR:** Yes No **DQA:** _____ **Date:** _____

Resolution: _____ **Disposition:** _____ **QA: N/C Closed:** _____ **Date:** _____

NCR:		WORK ORDER NON-CONFORMANCE (NCR)						
DATE	STEP	Description of NC Section A	Corrective Action Section B			Verification Section C	Approval Chief Eng	Approval QC Inspector
			Initial Chief Eng	Action Description Chief Eng	Sign & Date			

NOTE: Date & initial all entries

Picklist Print

Monday, July 25, 2011 9:20:17 AM

Work Order ID: 72392

Parent Item: D412-702-305

Parent Item Name: Harness Assembly

Start Date: 7/25/2011 **Required Date:** 9/5/2011

Start Qty: 1.00 **Required Qty:** 1.00

MS21042L3 Nut	Purchased	No	100	Each	1,414.000	4	4	11/08/10

Location	Loc Qty	Loc Code
ST300	1414	
117441	654	
117601	400	
117885	360	4

Dart Aerospace Ltd

W/O:		WORK ORDER CHANGES					
DATE	STEP	PROCEDURE CHANGE	By	Date	Qty	Approval Chief Eng / Prod Mgr	Approval QC Inspector

Part No: _____ **PAR #:** _____ **Fault Category:** _____ **NCR:** Yes No **DQA:** _____ **Date:** _____

Resolution: _____ **Disposition:** _____ **QA: N/C Closed:** _____ **Date:** _____

NCR:		WORK ORDER NON-CONFORMANCE (NCR)						
DATE	STEP	Description of NC Section A	Corrective Action Section B			Verification Section C	Approval Chief Eng	Approval QC Inspector
			Initial Chief Eng	Action Description Chief Eng	Sign & Date			

NOTE: Date & initial all entries

H:\fFORMS\Quality Assurance\approved QA\NCRWO RevE

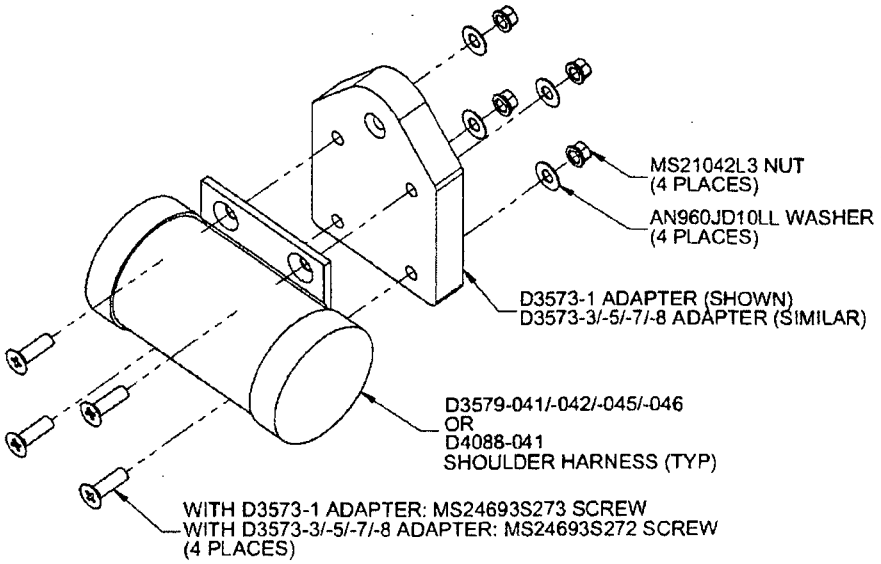

***DETAIL 'K'** D412-702-101A/-103A/-105A/-107A/-109A/-115A/-117A AND D412-702-101B/-103B/-105B/-107B/-109B/-115B/-117B OR -301/-303/-305/-307/-309/-315/-317 HARNESS ASSEMBLIES*

P COPY
RETURN TO
ENGINEERING
UNCONTROLLED COPY
SUBJECT TO AMENDMENT
WITHOUT NOTICE
WORK ORDER
NO. 72392
11-07-25

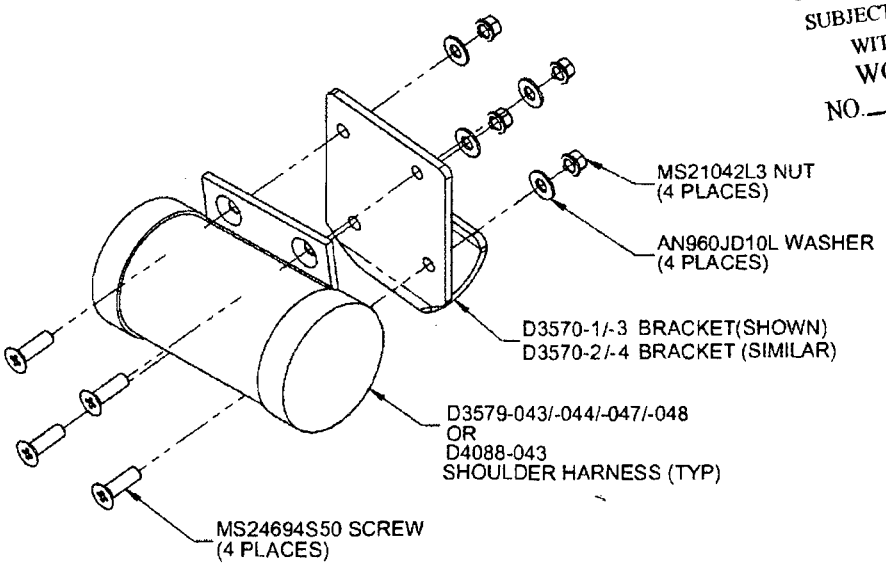

***DETAIL 'L'** D412-702-111A/-111B/-113A/-113B OR -311/-313/-321/-323 HARNESS ASSEMBLIES*

• COPYRIGHT © 2004 BY DART AEROSPACE LTD. •
THIS DOCUMENT IS PRIVATE AND CONFIDENTIAL AND IS SUPPLIED ON THE EXPRESS CONDITION THAT IT IS NOT TO BE USED FOR ANY PURPOSE OR COPIED OR COMMUNICATED TO ANY OTHER PERSON WITHOUT WRITTEN PERMISSION FROM DART AEROSPACE LTD.

Dart Aerospace Ltd

W/O:		WORK ORDER CHANGES					
DATE	STEP	PROCEDURE CHANGE	By	Date	Qty	Approval Chief Eng / Prod Mgr	Approval QC Inspector

Part No: _____ PAR #: _____ Fault Category: _____ NCR: Yes No DQA: _____ Date: _____

Resolution: _____ Disposition: _____ QA: N/C Closed: _____ Date: _____

NCR:		WORK ORDER NON-CONFORMANCE (NCR)						
DATE	STEP	Description of NC Section A	Corrective Action Section B			Verification Section C	Approval Chief Eng	Approval QC Inspector
			Initial Chief Eng	Action Description Chief Eng	Sign & Date			

NOTE: Date & initial all entries

H:\fFORMS\Quality Assurance\approved QA\NCRWO RevE